N 70, BUILT-IN FRIDGE-FREEZER WITH FREEZER AT BOTTOM, 177.2 X 55.8 CM, SOFT CLOSE FLAT HINGE
KI7863D30A

The bottom freezer with VitaFresh plus drawer: keeps your fruit and vegetables fresher for longer.

- √ Fresh Safe – Ideal storage for fruit and vegetables.
- √ No Frost – No more defrosting your freezer.
- √ Easy Access Shelf – Slides out to give you better access to fridge contents.
- √ Adjustable Glass Shelves – Height adjustable shelves create the space you need for inspiring dishes in your fridge
- √ LED Light – Pleasantly bright light in the entire fridge with long-life LEDs.

Annual energy consumption AU:	276 kWh
Freezer Net capacity:	67 l
Built-in / Free-standing:	Built-in
Door panel options:	Not possible
Height:	1772 mm
Width of the appliance:	558 mm
Depth of the product:	545 mm
Required niche size for installation (HxWxD):	1775 x 560 x 550 mm
Net weight:	72.8 kg
Fuse protection:	10 A
Door hinge:	Right reversible
Voltage:	220-240 V
Frequency:	50 Hz
Length electrical supply cord:	230.0 cm
Storage Period in Event of Power Failure (h):	9 h
Number of compressors:	1
Number of independent cooling systems:	2
Interior ventilator:	Yes
Reversible Door Hinge:	Yes
Number of Adjustable Shelves in fridge compartment:	4
Shelves for Bottles:	Yes
Frost free system:	Freezer
Installation typology:	Fully Integrated

4 242004 279990

N 70, BUILT-IN FRIDGE-FREEZER WITH FREEZER AT BOTTOM, 177.2 X 55.8 CM, SOFT CLOSE FLAT HINGE
KI7863D30A

- No Frost, Fridge/freezer combination built in

Performance & Consumption

- 3.5 Energy Stars Rating, 276 kWh energy consumption per year

Design

- LED interior light in fridge section

Convenience & Safety

- 7 segment electronic control
- Constant temperature by intelligent sensor technology
- SuperCool function with automatic deactivation - Automatically brings down the temperature of the refrigerator to cool new groceries rapidly
- SuperFreezing function - Automatically brings down the temperature of the freezer to cool new items rapidly
- Holiday mode
- Acoustic door open alarm
- Active Warning System by Temperature increase, Failure Memory Function

Shelving & Compartments

- 5 safety glass shelves (4 height adjustable), 1 Extendable glass shelf
- 5 door bins, 1x dairy compartment
- 1 FreshSafe 2 drawer; High humidity retains nutriens up to two times longer.

Freezer Compartment

- No Frost - no more defrosting!
- Safety glass
- 3 transparent freezer drawers, incl.1 Big Box

Dimensions

- Dimensions (H x W x D): 1772 mm x 558 mm x 545 mm
- Cut-out Dimension (H x W x D): 1775 mm x 560 mm x 550 mm

Technical Information

- Reversible door hinge
- Voltage 220 - 240 V
- Transportation handles

Accessories

- 2 x cold pack, ice cube tray
- bottle holder in door tray

Comfort

- Multiairflow system - Minimises fluctuating temperatures by ensuring optimal and uniform air circulation in the fridge

N 70, BUILT-IN FRIDGE-FREEZER WITH FREEZER AT BOTTOM, 177.2 X 55.8 CM, SOFT CLOSE FLAT HINGE
KI7863D30A

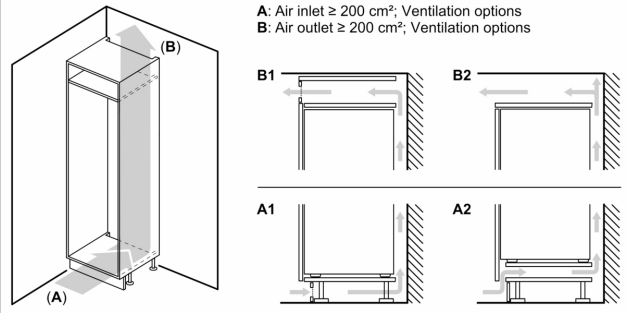

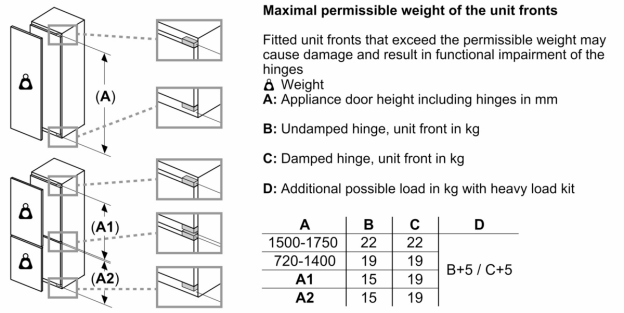

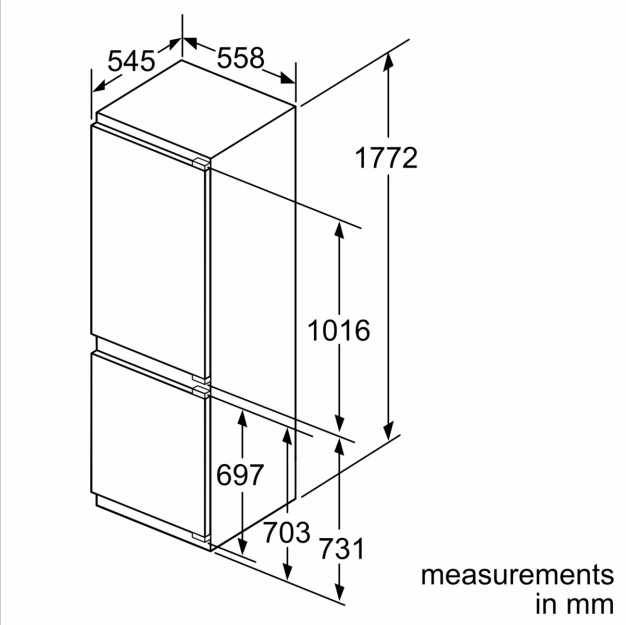

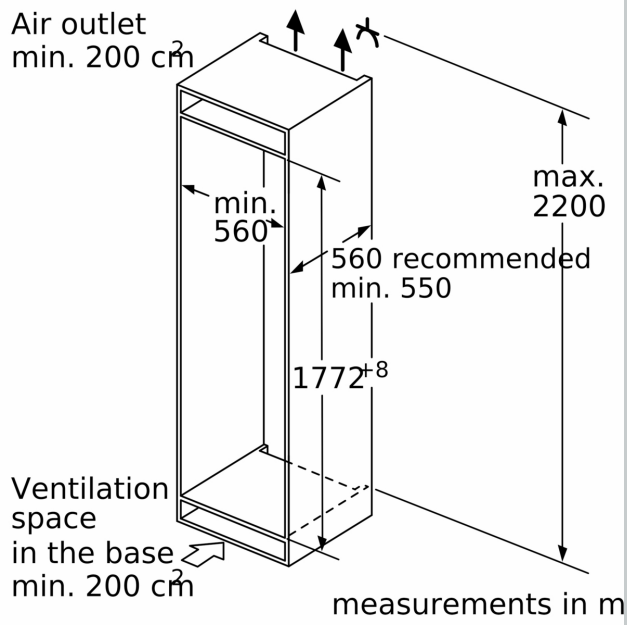

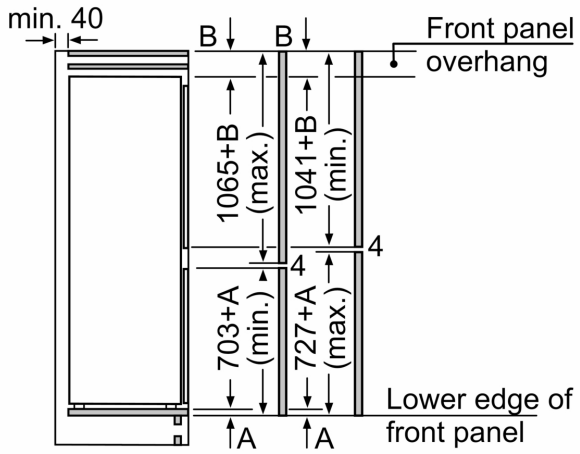

The specified unit door dimensions are valid for a door gap of 4 mm.

measurements in mm

measurements in mm
Recommended gap dimensions for flat hinges

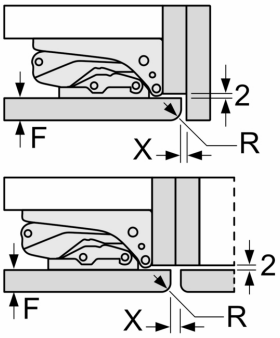

F	R	X
16-19	0-3	2.5
20	0-1	3
	2-3	2.5
21	0-1	3
	2-3	2.5
22	0	4
	1	3.5
	2-3	3

The gap dimensions recommended in the table must be adhered to in order to ensure that appliance doors do not collide with anything when they are opened, and to avoid causing damage to kitchen units.