SIEMENS

iQ700, Induction cooktop with extractor, 80 cm
EX87BNX68E

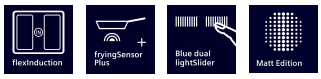

1 x Slider for unducted recirculation, 1 x Clean Air Plus odor filter

HZ390090 Wok Set consisting of 3 Items, HZ390522 Griddle Plate, HZ9FF010 Flex Pan, large, HZ9FF040 Flex Pan set, 4 pcs., HZ9SE030 Set of 2 pots and 1 pan, HZ9TY010 Teppan Yaki, HZ9VDKE1 Exhaust kit, HZ9VDKR0 Recirculation kit 2 L-bow (70cm), HZ9VDSB1 90° flat duct bend horizontal, HZ9VDSB2 90° flat duct L vertical, HZ9VDSB3 90° flat duct M vertical, HZ9VDSB4 90° flat duct S vertical, HZ9VDSI0 Adapter round-flat, HZ9VDSI1 90° Adapter round-flat, HZ9VDSM1 Straight tube 500mm, HZ9VDSM2 Straight tube 1000mm, HZ9VDSS1 Connector sleeve (female), HZ9VDSS2 Flexibel connecting piece DN 150 flat, HZ9VEDU0 Acoustics Filter, HZ9VRCR1 Clean Air Plus odor filter (replacement), HZ9VRPD1 Plinth Diffusor

Extraordinary design combining a flexInduction cooktop with a fully integrated flush air-inlet.

- ✓ Vented cooktop – Integrates quiet extraction to keep air clear and views open.
- ✓ Matte Edition – Less visible scratches*, fingerprint-resistant and easy to clean.
- ✓ flexInduction – Smart cooking zone that adapts to your cookware.
- ✓ fryingSensor Plus – No more burning or scorching your meals.
- ✓ Blue dual lightSlider – Elegant touch and slide control.

Product name/family: ..... Cooking zone ceramic
Built-in / Free-standing: ..... Built-in
Source of energy: ..... Electric
Total number of positions that can be used at the same time: 4
Required niche size for installation (HxWxD): .....223 x 750-750 x 490-490 mm
Width of the appliance: .....812 mm
Dimensions (HxWxD): .....223x812x520 mm
Dimensions of the packed product: .....440x940x660 mm
Net weight: .....26.8 kg
Gross weight: .....31.6 kg
Location of control panel: ..... Front
Basic surface material: .....Ceramic
Color of surface: .....Matte Black
Length electrical supply cord: ..... 110 cm
Sealed Burners: ..... No
Heating with booster: ..... All
Power of 2nd heating element (kW): ..... 3300.0 W
Number of power settings: .....17-stage + 2 intensive
Max. ducted extraction: ..... 500 m³/h
Boost position output recirculating: .....595.0 m³/h
Max. recirculation: .....499 m³/h
Noise level: .....69 dB(A) re 1pW
Odour filter: ..... No
Operating mode: .....Exhaust / Recirculation (Accessory available separately)
Clean filter reminder: .....Yes
Voltage: .....220-240/380-415 V
Frequency: .....50-60 Hz
Colour: .....Matte Black
Included accessories: .....1 x Slider for unducted recirculation, 1 x Clean Air Plus odor filter

4 242003 973042

SIEMENS

iQ700, Induction cooktop with extractor, 80 cm
EX87BNX68E

- 80 cm cooktop: space for 4 pots or pans

Flexibility of cooking zones

- 2 flexZones: use cookware of any shape or size anywhere within the 40cm long zone.
- Cooking zone front left: 200 mm, 240 mm, 2.2 KW (max. power 3.7 KW)
- Cooking zone rear left: 200 mm, 240 mm, 2.2 KW (max. power 3.7 KW)
- Cooking zone rear right: 200 mm, 240 mm , 2.2 KW (max power 3.7 KW)
- Cooking zone front right: 200 mm, 240 mm, 2.2 KW (max. power 3.7 KW)

Comfort & Convenience

- Directly control the power on the two blue illuminated touch bars (invisible when switched off).
- 17 power levels for each cooking zone: precisely adapt the heat with 17 power levels (9 main levels and 8 intermediate levels).
- Keep warm function: keep dishes warm at preset low power level.
- Switch-off timer: switches off the cooking zone at the end of the time set (e.g. for boiled eggs).
- Count-down timer: an alarm sounds at the end of the time set (e.g. for pasta).
- Count-up timer: shows how much time has passed since starting the timer (e.g. for potatoes).

Time saving & efficiency

- powerBoost for all zones: boil water faster with up to 50% more power than at the highest standard level.
- panBoost: heat up pans more quickly than at the highest standard level while protecting the pan coating.
- Cooking zones will automatically join and separate based on the shape and size of the cookware placed.
- powerMove Plus: increase or decrease the power level simply by moving the pot forwards or backwards.
- flexMotion: when moving a pot to a different cooking zone, transfer all previous settings to the new zone at the touch of a button.
- When moving a pot on the Flex zone, the settings adjust instantly and the cooking zone adapts to the size of the cookware
- Automatic zone selection: when switched on, the cooktop automatically selects the cooking zone on which a new cookware is placed.
- quickStart: Quick and automatic first pot detection: when switching on, the cooktop automatically selects the cooking zone with cookware on it.
- reStart - Quickly reinstates previous settings: in case of unintentional switch-off, restore all previous settings by switching on the cooktop again within 4 seconds.

Cooking assistance

- Cooking sensor ready (sensor sold separately): prevents overboiling of pots with the automatic temperature regulation of the pot-attached sensor.
- Frying Sensor with 5 frying levels: prevents scorching with the automatic temperature regulation of the integrated sensor.
- Cooktop Cooking Assistant (only via Home Connect App): easily find the right temperature setting for a certain dish via the Home Connect app.

Connectivity

- Remote Monitoring and Control: check if the cooktop is switched off even when not at home, and find recipes or additional functions in the Home Connect app.

Design

- Matt Edition: elegant, matt glass design which is less susceptible to visible scratches and fingerprints.
- studioLine frame, black design
- Siemens StudioLine exclusive zone printing: minimalistic design thanks to dark coloured zone printing.

Safety

- 2-stage (h/H) digital residual heat indicator: indicates which cooking zones are still hot or warm.
- Childproof lock: prevent unintended activation of the cooktop.
- wipeProtection function: wipe overboiled liquids without unintentionally changing settings (blocking all touch buttons for 30 seconds).
- Main switch: switch off all cooking zones at the touch of a button.
- Automatic safety switch-off: for safety reasons, heating stops after a preset time without interaction.
- Energy consumption display: shows the electricity consumption of the last cooking process.

Installation

- Dimensions of the product (HxWxD mm): 223 x 812 x 520
- Required niche size for installation (HxWxD mm) : 223 x 750 x (490 - 490)
- Min. worktop thickness: 16 mm
- Connected load: 7.4 KW
- powerManagement Function: enables the total power of the cooktop to be limited if necessary (for suitability and installation, consult a licensed electrician).
- Power cord: 1.1 m, Cable included

Accessories

- Clean Air Plus odor filter, Slider for unducted recirculation included
- Installation into 60 cm floor cupboard possible

Integrated ventilation downdraft system

- Induction cooktop with fully integrated high-performance downdraft extractor.
- Suitable for ducted or recirculated extraction configuration. Installation accessories for unducted recirculation, among these four cleanAir Plus odour filters and a telescopic slider element, are included in the cooktop. Accessories for other installation options are available, details in the planning notes.
- Aesthetically integrated fully flush air intake design with floating, heat resistant glass ceramics element for free movement and placement of cookware.

SIEMENS

- Ventilation system with 17 electronically controlled fan power levels and 2 Boost-/Intensive fan power levels (with automatic revert) via Dual LightSlider user interface.
- Automatic switch-on of ventilation system when a cooking zone is used.
- Sensor-based and cooktop-based, fully-automatic adjustment of power levels via advanced algorithm for maximum convenience.
- 3 possible sensitivity modes of algorithm for maximum convenience (Low-noise oriented, balanced, performance-oriented).
- Automatic delayed shut-off after cooking to erase residual odors after cooking (in specific ultra low-noise fan level, 12min in ducted extraction, 30min in recirculated extraction, can be shut-off manually).
- Optionally manual control possible by Dual LightSlider.
- High-performance, low-noise blower with energy-effcienct BLDC-technology. High extraction rates at very low noises with pleasant noise frequencies through psycho-acoustically and aerodynamically optimized interieur with enclosed, non-visible blower. Highly pressuredrop resistant even with longer and more complex ductings.
- Easy-to-detach and easy-to-clean grease filter and liquid collector unit:
- - Convenient one-hand removal of unit via floating glass ceramics handle.
- Integrated, large-scale, high performance stainless-steel grease filters with 12 filtration layers and one black top layer for enhanced aesthetical integration.
- All parts of the unit are easy-to-clean, fully dishwasher safe and heat resistant.
- (Upper) Liquid collector unit with 200ml of capacity for standard accidental spillages or cooking condensate.
- Powerful drainage system for spillages that exceed 200ml of liquids.
- Liquid safety collector with additional capacity of 700ml for more severe accidental situations. Dishwasher safe. Easily accessible and detachable from below.
- Overall capturing capacity of 900ml (200ml + 700ml).
- Watertight blower system.
- Ventilation system performance:
- - Extraction performance in ducted extraction (according to EN 61591): min. normal setting 154 MQH , max. normal setting 500 MQH, max. Boost-/Intensive setting 622 MQH.
- - Extraction performance in recirculated extraction (according to EN 61591): min. normal setting 132 m3/h , max. normal setting 499 m3/h , max. Boost-/Intensive setting 595 m3/h.
- - Noise level in ducted extraction (Sound power level according to EN 60704-3): min. normal setting 42 dB re 1 pW, max. normal setting 69 dB re 1 pW, max. Boost-/Intensive setting 74 dBre 1 pW.
- - Noise level in recirculated extraction (Sound power level according to EN 60704-3.): min. normal setting 41 dB re 1 pW, max. normal setting 68 dB re 1 pW, max. Boost-/Intensive setting 72 dBre 1 pW.
- - Grease filter efficiency (according to EN 61591) 94 %.
- All performance data is preliminary and based on latest test results with advanced prototypes and will be updated with tests from final products.
- Extraction performance in ducted extraction (according to EN 61591): min. normal setting 154 m3/h , max. normal setting 500 m3/h , max. Boost-/Intensive setting 622 m3/h .
- Extraction performance in recirculated extraction (according to EN 61591): min. normal setting 132 m3/h , max. normal setting 499 m3/h , max. Boost-/Intensive setting 595 m3/h.
- - Noise level in ducted extraction (Sound power level according to EN 60704-3): min. normal setting 42 dB re 1 pW, max. normal setting 69 dB re 1 pW, max. Boost-/Intensive setting 74 dB re 1 pW.
- - Noise level in recirculated extraction (Sound power level according to EN 60704-3.): min. normal setting 41 dB re 1 pW, max. normal setting 68 dB re 1 pW, max. Boost-/Intensive setting 72 dB re 1 pW.
- Noise min. normal setting & max. normal setting: 42 dB & 69 dB .
- For recirculation configuration: 2 x 2 battery of directly integrated, high-performance cleanAir Plus odour filters.
- - Optimized odor reduction performance for cooking applications with complex odor molecules (e.g. fish).
- - Large scale filter surface with high odor reduction capabilities.
- - Anti-pollen functionality: The filter retains an extremely high amount of airborne pollen and deactivates allergens which are retained by the filter.
- - cleanAir odor filters: Lifetime of 360 hours of cooking (non-regenerative).
- - Low-noise filters with optimized psycho-acoustics.
- - Easy-to-access and easy-to-remove from above.
- - Saturation indications for cleanAir odor filter via user interface notification and via the Home Connect app with a convenient replenishment re-order option (replenishment cleanAir filter set HZ9VRCR0).
- For ducted extraction configuration: 2 x 2 Battery of directly integrated, high-performance low-noise acoustic filters for significantly lower noise and improved psycho-acoustics.

Planning & installation notes

- Suitable for ducted or recirculated extraction installations in 4 different options (unducted, partly and fully ducted recirculation or ducted extraction). Installation accessories for unducted recirculation, among these four cleanAir Plus odour filters and a telescopic slider element, are included in the cooktop. The included accessories allow easy and quick installations and can be planned in all worktop depths ≥60cm. For other types of installation, one of the following accessory kits is recommended:
- HZ9VDKR0 for partly-ducted recirculation in worktops of ≥70cm depth with max. worktop height of 960 mm.
- - HZ9VDKE1 as starter kit for ducted extraction in worktops of ≥60cm depth.
- To complete the fully ducted extraction or to do any other individual recirculation planning different ducting accessories are available.
- Planning suggestions:
- - Installation is possible in island as well as wall oriented configurations.
- - The product and its accessories comply with the Needle Flame Test (according to IEC 60695-11-5) and the B1/B2 building material class (according to DIN 4102-1).
- - The max. immersion depth is 223mm below glass for top mounted appliances and 227mm for flush installed appliances.
- - The appliance must be freely accessible from below (i.e. for accessing the lower liquid safety collector).
- - No false floor is necessary below the cooktop with integrated downdraft ventilation system. The drawers and/or shelves in the floor unit must be removable. The backpanel of the floor unit can be kept - only a cut-out for the air outlet is needed (position and size can be taken from the installation instructions).
- - The minimum worktop thickness is 16mm for top mounted and flush installed appliances with the standard installation system. Installation in even thinner worktops is also possible with the spare

part: 626792.

- - The overall appliance weight is 26kg - the bearing capacity and stability, in the case of very thin worktops in particular, must be supported using suitable substructures. The overall appliance weight and the worktop manufacturer's structural integrity specifications are to be taken into account.
- - For partly ducted and unducted recirculation extraction installations, a return-flow aperture of ≥400cm² is to be respected in the plinth area. The aperture can be realized via outlet grids, lamella grids or subtly shortened plinths depending on the assortment of the kitchen furniture manufacturer.
- - The air outlet on the backside of the appliance can directly be accessed with a male flat duct element (DN 150).
- - The pressuredrop resistant blower allows longer and more complex ductings up to 8m with three 90° bows while keeping sufficient performance.
- - When installing a ventilation hood with ducted extraction and a chimney-vented fireplace, the power supply line of the appliance needs a suitable safety switch. This is not required for configurations in recirculated extraction.
- - In ducted extraction configuration a one-way flap (or backflow trap) with a maximum opening pressure of 65Pa should be installed.

SIEMENS

iQ700, Induction cooktop with extractor, 80 cm
EX87BNX68E

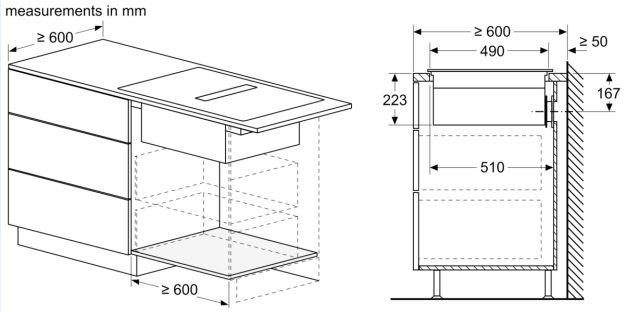

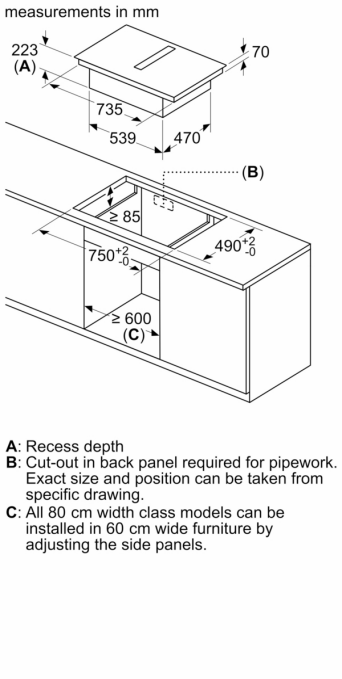

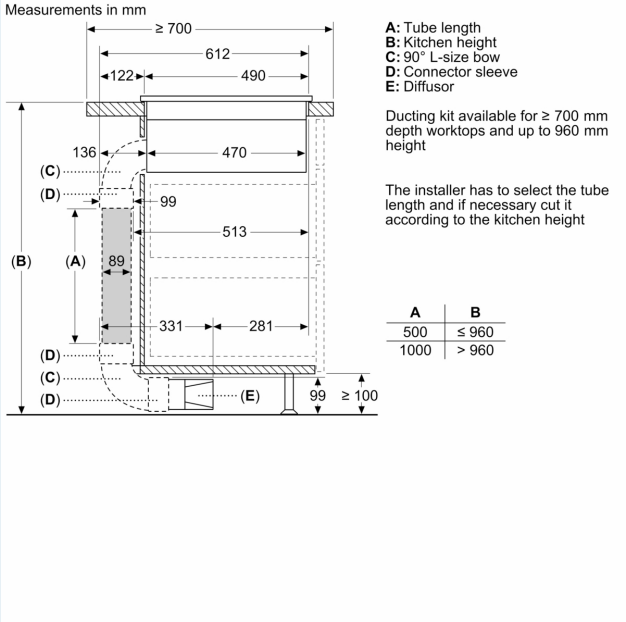

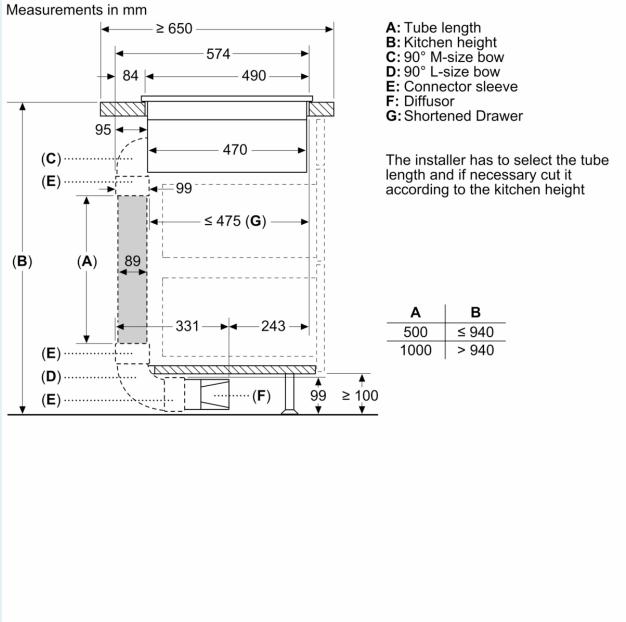

SIEMENS

Measurements in mm

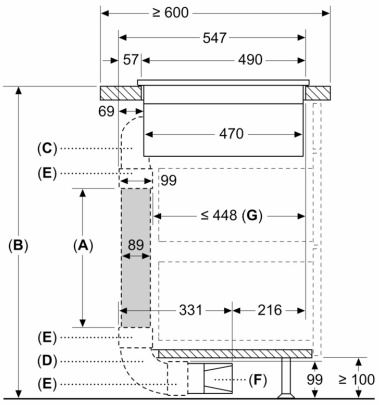

A: Tube length
B: Kitchen height
C: 90° S-size bow
D: 90° L-size bow
E: Connector sleeve
F: Diffusor
G: Shortened Drawer

Ducting kit available for ≥ 600 mm depth worktops and up to 960 mm height

The installer has to select the tube length and if necessary cut it according to the kitchen height

A	B
500	≤ 990
1000	> 990

measurements in mm

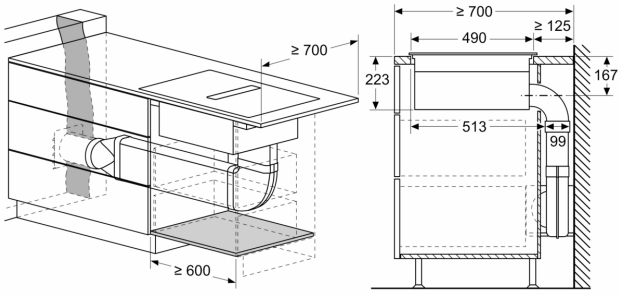

measurements in mm

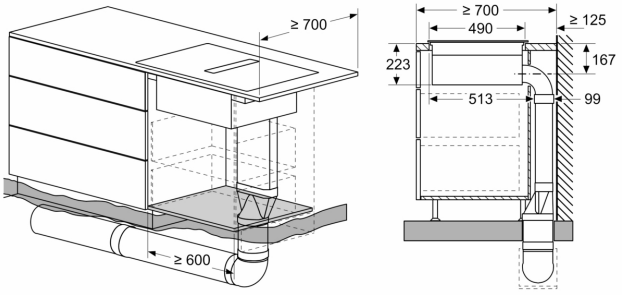

measurements in mm

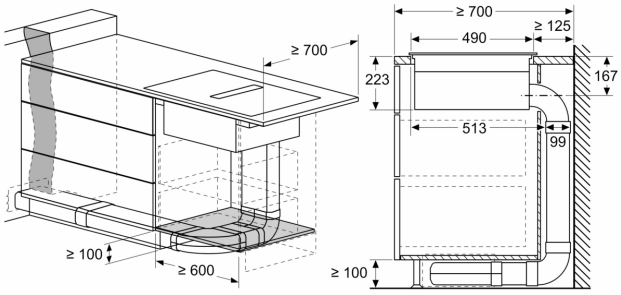

measurements in mm

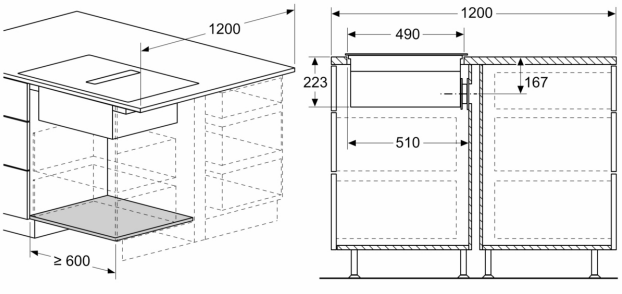

measurements in mm

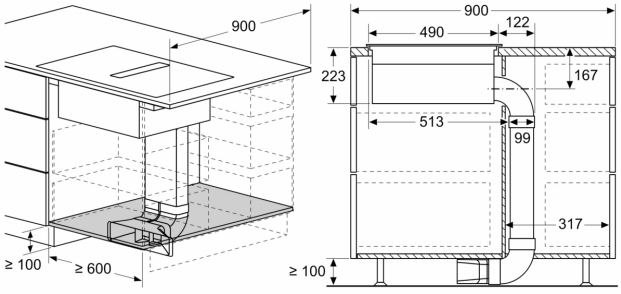

SIEMENS

Measurements in mm

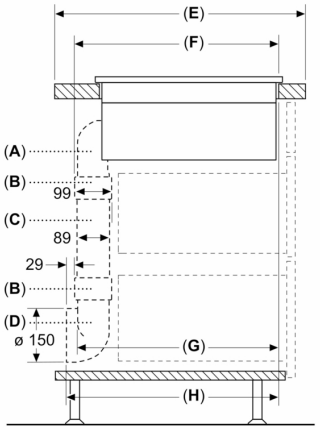

A	E	F	G	H
S-size	≥ 600	547	545	579
M-size	≥ 650	574	569	603
L-size	≥ 700	612	609	643

A: 90° Bow
B: Connector sleeve
C: Straight tube
D: 90° Adapter round–flat

Measurements in mm

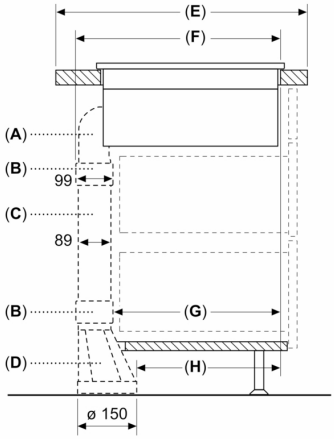

A	E	F	G	H
S-size	≥ 600	547	451	389
M-size	≥ 650	574	475	413
L-size	≥ 700	612	515	453

A: 90° Bow
B: Connector sleeve
C: Straight tube
D: Straight adapter round-flat

Measurements in mm

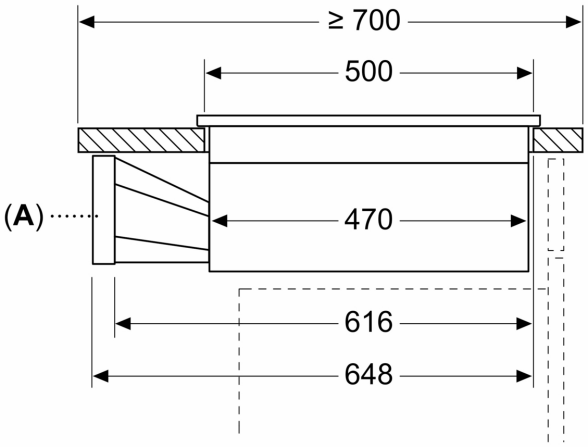

A: Adapter round-flat

measurements in mm

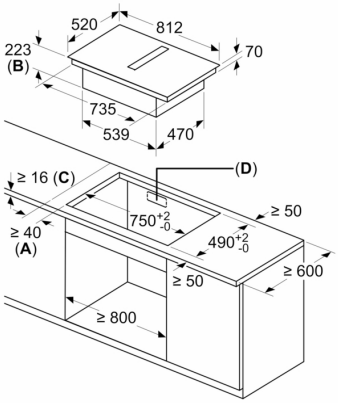

A: Minimum distance from the hob cut-out to the wall
B: Recessing depth
C: The worktop into which the hob is installed must withstand loads of approx. 60kg; suitable substructures must be used if required.
D: Cut-out in back panel required for pipework. Exact size and position can be taken from specific drawing.

SIEMENS

measurements in mm
Front view

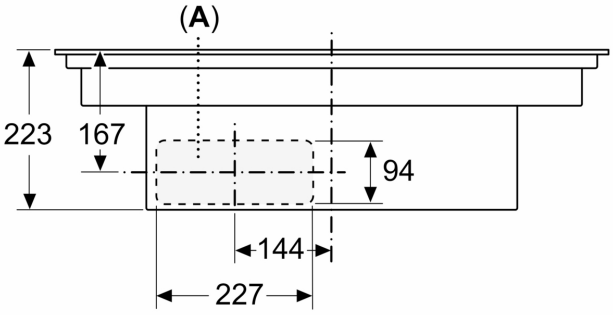

A: Connected directly at the rear

measurements in mm
Front view – unit cut-out
for unducted recirculation

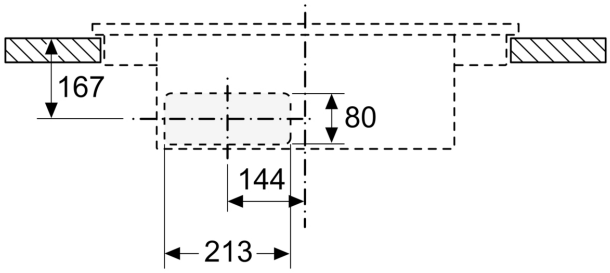

measurements in mm
Side view

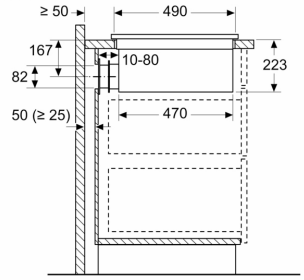

When installing directly against outer walls that are not insulated (μ ≥ 0.5 W/m² °C), we recommend using partially or fully ducted recirculation configurations.
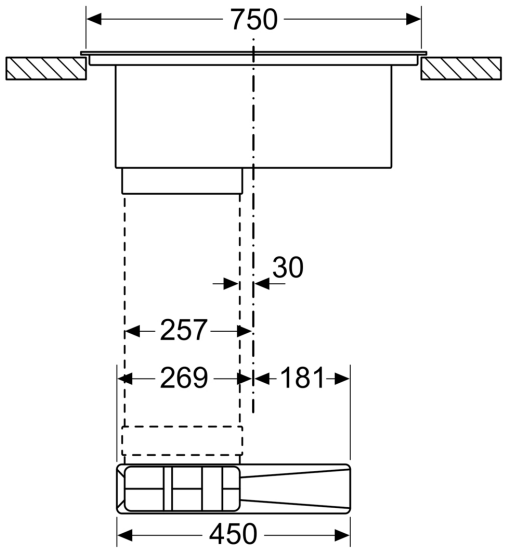
measurements in mm
Front view